NOT TO BE USED, DISCLOSED OR REPRODUCED WITHOUT PERMISSION.
PROPERTY OF FREEDMAN SEATING COMPANY.

REV.	DATE	ECN	DESCRIPTION	BY	CHK'D.	APP'D.

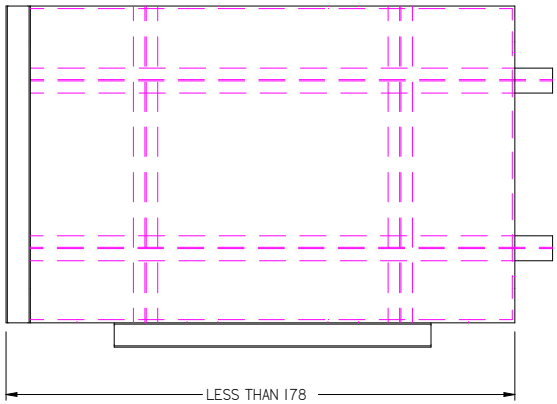

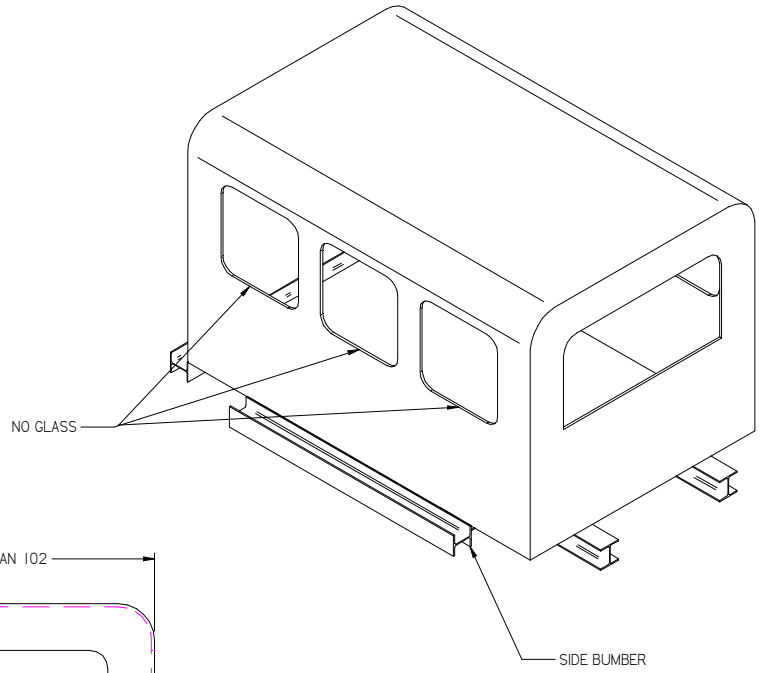

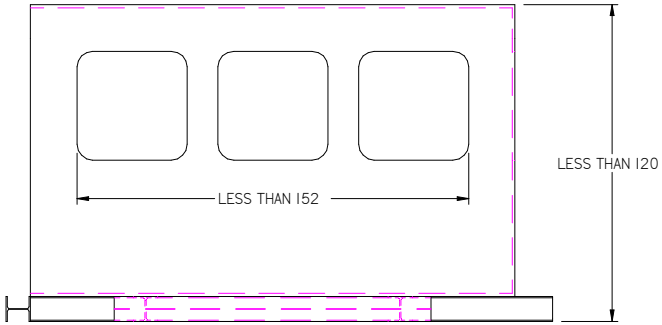

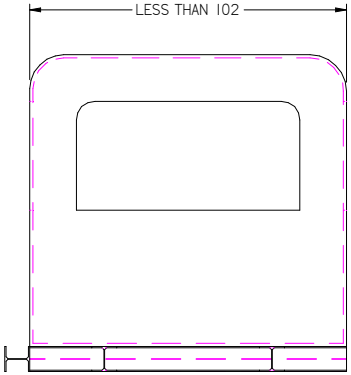

Tolerances Unless Otherwise Specified:
Fraction: 1/X +/- 1/32"
Decimal: X.XX +/- 0.02"
X.XXX +/- 0.005"
Angular +/- 1 Degree

Unspecified Radii are 1/8"

DRAWING NAME:
AISLE FACING SEATS - BUCK REQUIREMENTS

MATERIAL:
SPECIFICATION:

FREEDMAN SEATING

Freedman Seating Co.
4545 W. Augusta Blvd
Chicago, IL 60651

PROJECTION:

BY	DATE	CHECKED	APPROVED
AB	2/17/2011		

SIZE: D
DRAWING No.:
REV.:

SCALE: NOT TO SCALE
SHEET: 1 of 1